NIEDAX

XS Cable Management Systems

Perforated Cable Trays & Raceways

- Patented Roll Formed Profile
- Fast and Easy Installation
- Flexible Layout Feasibility
- Customized Solution
- Off the Shelf Availability
- Choice of Accessories

- ***Xtra Strength***
- ***Xtra Stability***
- ***Xtensive Solution***
- ***X Stock***

NIEDAX

A Perfect Solution

An Engineered Product with Quality, Consistency and Cost Effectiveness.

Standardized products equipped with robust technology and emphasizing on the safety aspects without compromising on load bearing capacity.

ICONS

Cable Tray Finishes

A	Alu Zinc & Magnesium
4	AISI 304 Stainless Steel
6	AISI 316 Stainless Steel
8	AISI 316 L Stainless Steel
G	Pre-Galvanized
H	Hot-Dip Galvanized
P	Powder Coated

Items

A (Not applicable)
P (Perforation)
N (Non-Perforation)
C (Conventional Cover)
Z (XS Tray Cover)
t (Thickness in mm)
l (Length in mm)

Dimensions

Widths (W)		Height (H)	
50 mm	05	50 mm	5
75 mm	07	75 mm	7
100 mm	10	100 mm	1
150 mm	15		
200 mm	20		
300 mm	30		
400 mm	40		
450 mm	45		
500 mm	50		
600 mm	60		
750 mm	75		
900 mm	90		

* All Dimensions are in millimeters (mm)

Accessories

TB (Tee Bend)
H3 (30° Horizontal Bend)
H4 (45° Horizontal Bend)
H9 (90° Horizontal Bend)
V3 (30° Vertical Bend)
V4 (45° Vertical Bend)
V9 (90° Vertical Bend)
CB (Cross Bend)
RL (Reducer Left)
RR (Reducer Right)
RE (Reducer Equal)
VU (Vertical Up Bend)
VD (Vertical Down Bend)
ET (Extension Tee)

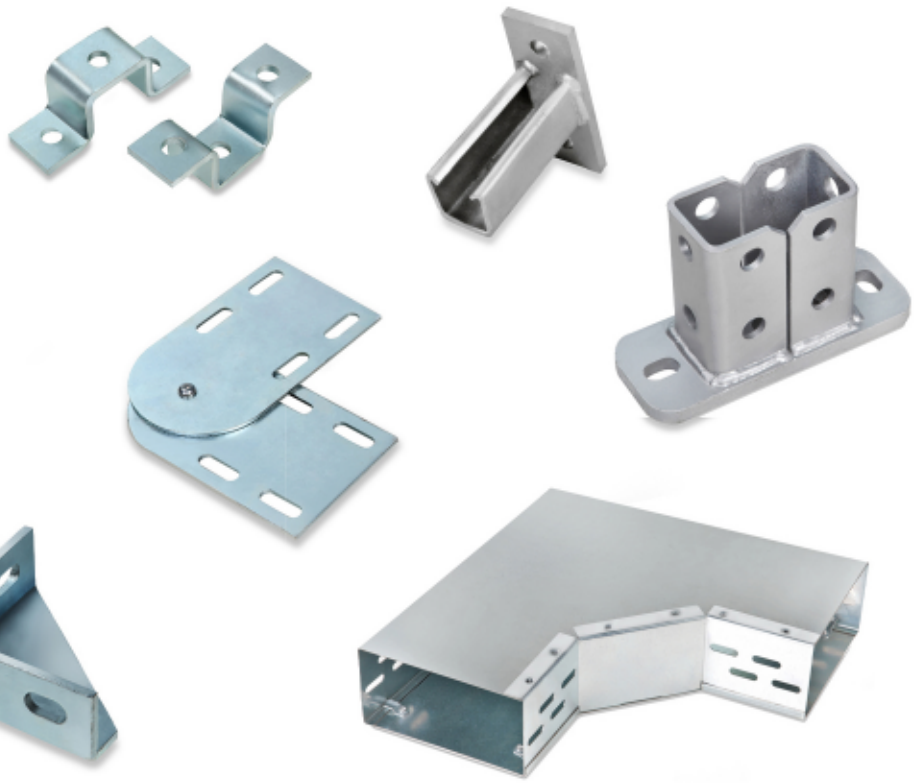

CABLE TRAY SPECIFICATIONS

Cable Tray Design & Manufacture

Niedax's Cable Tray systems are designed and manufactured according to National (Indian Standard, CPRI) and International Standards (Such as NEMA VE1 and IEC 61537).

Material

Pre-Galvanised Steel:
Trays shall meet the minimum yield and tense strength of the ASTM standards (ASTM A653) with G 90 coating thickness.

Hot-Dip Galvanised Steel:
Trays are Hot-Dip Galvanised in accordance with ASTM A123.

Stainless Steel:
Trays are constructed of AISI type 304, type 316 or type 316 L stainless steel.

Powder Coated:
Trays are pre-treated and powder coated as per IEC Standards.

Alu Zinc + Magnesium:
Trays with Zinc-Aluminium-Magnesium coating are ideal for multiple engineering applications where good corrosion resistance in very aggressive environments is required. Due to its unique composition it offers a self healing property on cut edges.

HRCA (Hot Rolled and Close Annealed):
Trays are made of hot roll steel which shall meet IS2062 standard.

CRCA (Cold Rolled Close Annealed):
Trays are made of cold roll steel which shall meet IS513 standard.

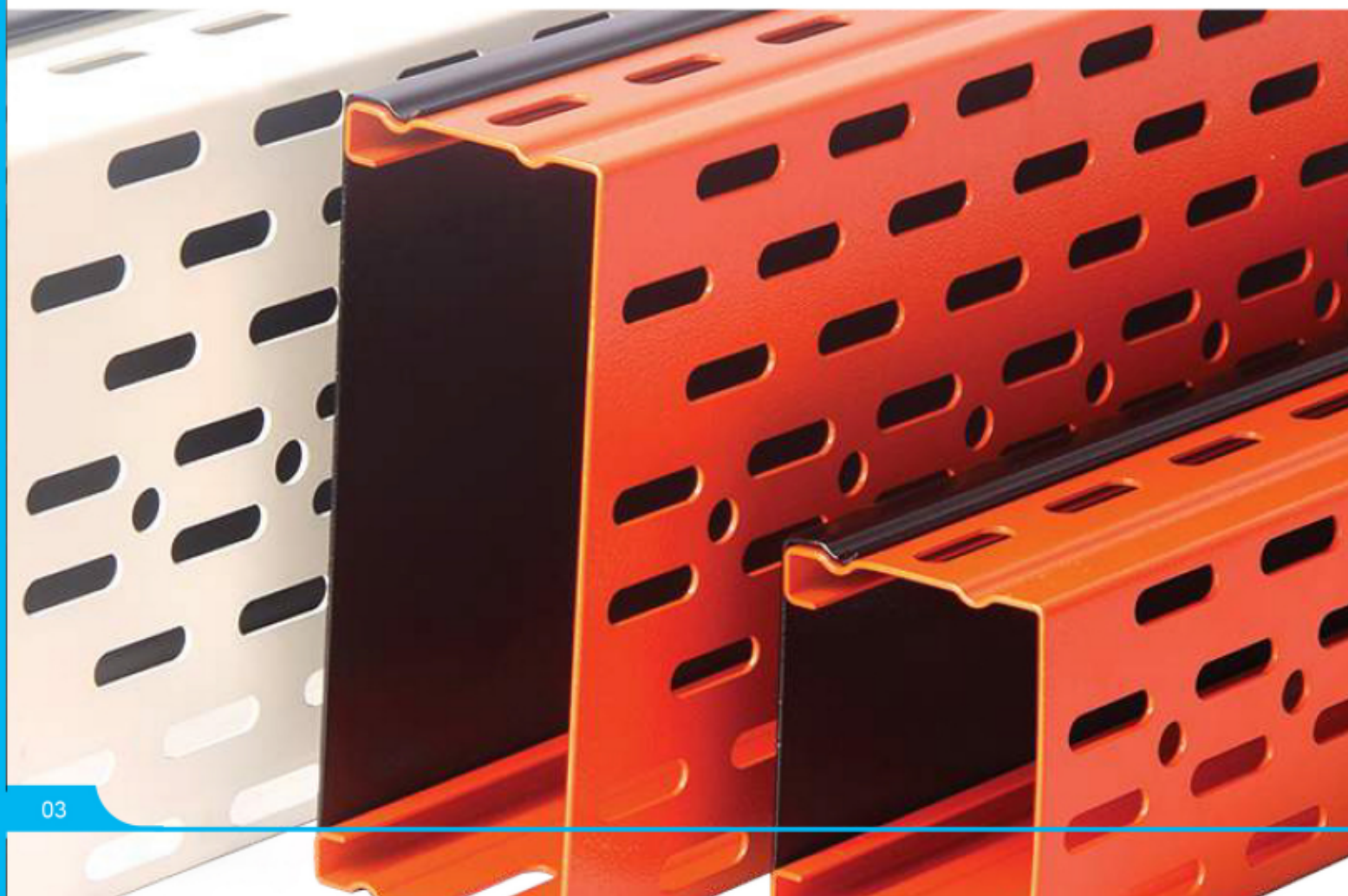

XS Range Profile Type Cable Tray

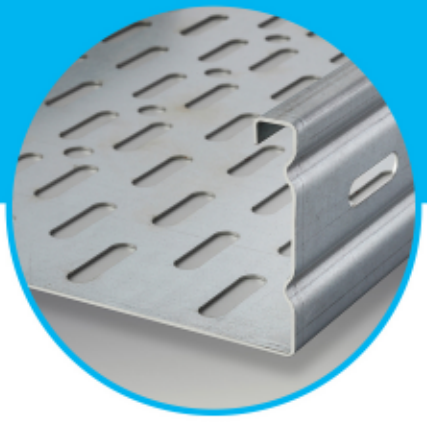

Rolled Flange For Extra Stability

Round Hole For Threaded Rod And Pitch Design To Suit Multiple Mounting Positions

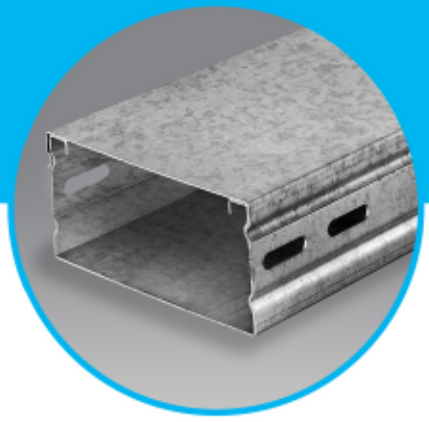

Snap On Cover

CABLE TRAY DIMENSIONS

Profile Design Cable Tray

Finish	Tray Model No.	Cover Model No.	Width (W) mm	Height (H) mm
G	XP055tlG	ZN050tlG	50	50
G	XP105tlG	ZN100tlG	100	50
G	XP155tlG	ZN150tlG	150	50
G	XP205tlG	ZN200tlG	200	50
G	XP305tlG	ZN300tlG	300	50
G	XP455tlG	ZN450tlG	450	50
G	XP605tlG	ZN600tlG	600	50
H	XP055tlH	ZN050tlH	50	50
H	XP105tlH	ZN100tlH	100	50
H	XP155tlH	ZN150tlH	150	50
H	XP205tlH	ZN200tlH	200	50
H	XP305tlH	ZN300tlH	300	50
H	XP455tlH	ZN450tlH	450	50
H	XP605tlH	ZN600tlH	600	50
A	Alu Zinc & Magnesium			
4	AISI 304	These finishes are available upon request.		
6	AISI 316			
8	AISI 316 L			
P	Powder Coated			

Front View

Profile Design Cable Tray

Finish	Tray Model No.	Cover Model No.	Width (W) mm	Height (H) mm
G	XP077tlG	ZN050tlG	50	75
G	XP107tlG	ZN100tlG	100	75
G	XP157tlG	ZN150tlG	150	75
G	XP207tlG	ZN200tlG	200	75
G	XP307tlG	ZN300tlG	300	75
G	XP457tlG	ZN450tlG	450	75
G	XP607tlG	ZN600tlG	600	75
H	XP077tlH	ZN050tlH	50	75
H	XP107tlH	ZN100tlH	100	75
H	XP157tlH	ZN150tlH	150	75
H	XP207tlH	ZN200tlH	200	75
H	XP307tlH	ZN300tlH	300	75
H	XP457tlH	ZN450tlH	450	75
H	XP607tlH	ZN600tlH	600	75
A	Alu Zinc & Magnesium			
4	AISI 304	These finishes are available upon request.		
6	AISI 316			
8	AISI 316 L			
P	Powder Coated			

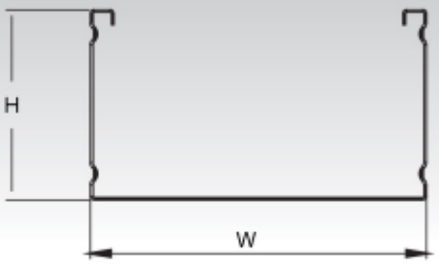

Front View

Profile Design Cable Tray

Finish	Tray Model No.	Cover Model No.	Width (W) mm	Height (H) mm
G	XP051tlG	ZN050tlG	50	100
G	XP101tlG	ZN100tlG	100	100
G	XP151tlG	ZN150tlG	150	100
G	XP201tlG	ZN200tlG	200	100
G	XP301tlG	ZN300tlG	300	100
G	XP451tlG	ZN450tlG	450	100
G	XP601tlG	ZN600tlG	600	100
H	XP051tlH	ZN050tlH	50	100
H	XP101tlH	ZN100tlH	100	100
H	XP151tlH	ZN150tlH	150	100
H	XP201tlH	ZN200tlH	200	100
H	XP301tlH	ZN300tlH	300	100
H	XP451tlH	ZN450tlH	450	100
H	XP601tlH	ZN600tlH	600	100
A	Alu Zinc & Magnesium			
4	AISI 304	These finishes are available upon request.		
6	AISI 316			
8	AISI 316 L			
P	Powder Coated			

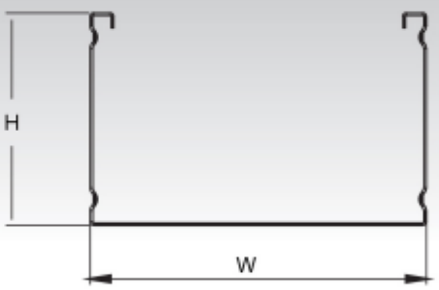

Front View

Cable Tray's Accessories Range

45° Horizontal Bend

Finish	Tray Model No.	Cover Model No.	Width (W) mm	Height (H) mm
G	TP055t0GH4	CN050t0GH4	50	50
G	TP105t0GH4	CN100t0GH4	100	50
G	TP155t0GH4	CN150t0GH4	150	50
G	TP205t0GH4	CN200t0GH4	200	50
G	TP305t0GH4	CN300t0GH4	300	50
G	TP455t0GH4	CN450t0GH4	450	50
G	TP605t0GH4	CN600t0GH4	600	50
H	TN055t0HH4	CN050t0HH4	50	50
H	TP105t0HH4	CN100t0HH4	100	50
H	TP155t0HH4	CN150t0HH4	150	50
H	TP205t0HH4	CN200t0HH4	200	50
H	TP305t0HH4	CN300t0HH4	300	50
H	TP455t0HH4	CN450t0HH4	450	50
H	TP605t0HH4	CN600t0HH4	600	50
A	Alu Zinc & Magnesium			
4	AISI 304	These finishes are available upon request.		
6	AISI 316			
8	AISI 316 L			
P	Powder Coated			

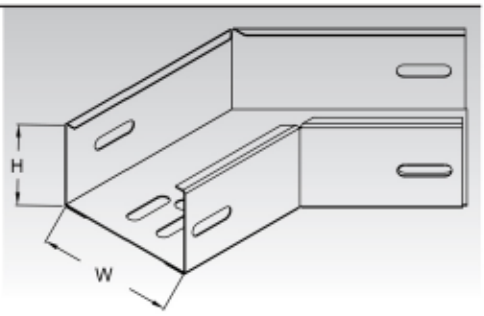

45° Vertical Bend

Finish	Tray Model No.	Cover Model No.	Width (W) mm	Height (H) mm
G	TP055t0GV4	CN050t0GV4	50	50
G	TP105t0GV4	CN100t0GV4	100	50
G	TP155t0GV4	CN150t0GV4	150	50
G	TP205t0GV4	CN200t0GV4	200	50
G	TP305t0GV4	CN300t0GV4	300	50
G	TP455t0GV4	CN450t0GV4	450	50
G	TP605t0GV4	CN600t0GV4	600	50
H	TP055t0HV4	CN050t0HV4	50	50
H	TP105t0HV4	CN100t0HV4	100	50
H	TP155t0HV4	CN150t0HV4	150	50
H	TP205t0HV4	CN200t0HV4	200	50
H	TP305t0HV4	CN300t0HV4	300	50
H	TP455t0HV4	CN450t0HV4	450	50
H	TP605t0HV4	CN600t0HV4	600	50
A	Alu Zinc & Magnesium			
4	AISI 304	These finishes are available upon request.		
6	AISI 316			
8	AISI 316 L			
P	Powder Coated			

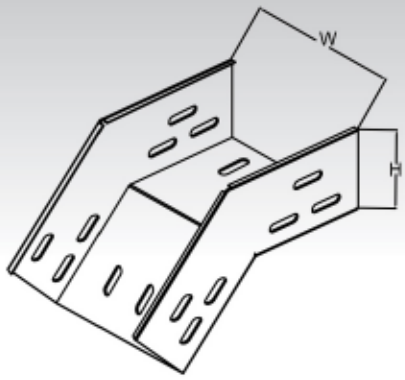

These accessories are available in 30° and 90° options.

TB (Tee Bend)

Finish	Tray Model No.	Cover Model No.	Width (W) mm	Height (H) mm
G	TP055t0GTB	CN050t0GTB	50	50
G	TP105t0GTB	CN100t0GTB	100	50
G	TP155t0GTB	CN150t0GTB	150	50
G	TP205t0GTB	CN200t0GTB	200	50
G	TP305t0GTB	CN300t0GTB	300	50
G	TP455t0GTB	CN450t0GTB	450	50
G	TP605t0GTB	CN600t0GTB	600	50
H	TP055t0HTB	CN050t0HTB	50	50
H	TP105t0HTB	CN100t0HTB	100	50
H	TP155t0HTB	CN150t0HTB	150	50
H	TP205t0HTB	CN200t0HTB	200	50
H	TP305t0HTB	CN300t0HTB	300	50
H	TP455t0HTB	CN450t0HTB	450	50
H	TP605t0HTB	CN600t0HTB	600	50
A	Alu Zinc & Magnesium			
4	AISI 304	These finishes are available upon request.		
6	AISI 316			
8	AISI 316 L			
P	Powder Coated			

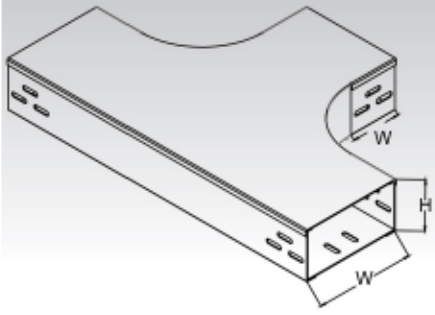

These accessories are also available in different heights.

CABLE TRAY DIMENSIONS

Cable Tray's Accessories Range

CB (Cross Bend)

Finish	Tray Model No.	Cover Model No.	Width (W) mm	Height (H) mm
G	TN055t0GCB	CN050t0GCB	50	50
G	TP105t0GCB	CN100t0GCB	100	50
G	TP155t0GCB	CN150t0GCB	150	50
G	TP205t0GCB	CN200t0GCB	200	50
G	TP305t0GCB	CN300t0GCB	300	50
G	TP455t0GCB	CN450t0GCB	450	50
G	TP605t0GCB	CN600t0GCB	600	50
H	TN055t0HCB	CN050t0HCB	50	50
H	TP105t0HCB	CN100t0HCB	100	50
H	TP155t0HCB	CN150t0HCB	150	50
H	TP205t0HCB	CN200t0HCB	200	50
H	TP305t0HCB	CN300t0HCB	300	50
H	TP455t0HCB	CN450t0HCB	450	50
H	TP605t0HCB	CN600t0HCB	600	50
A	Alu Zinc & Magnesium			
4	AISI 304	These finishes are available upon request.		
6	AISI 316			
8	AISI 316 L			
P	Powder Coated			

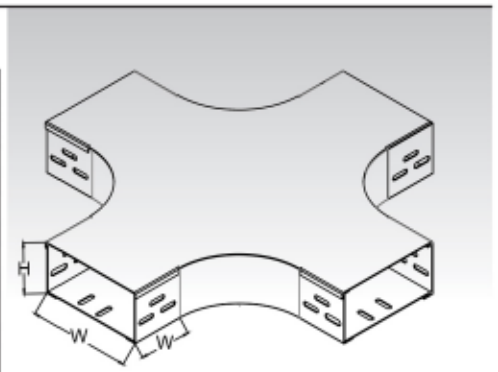

RL (Reducer Left)

Finish	Tray Model No.	Cover Model No.	Width (W1) mm	Width (W2) mm	Height (H) mm
G	TP105t0GRL05	CN100t0GRL05	100	50	50
G	TP155t0GRL10	CN150t0GRL10	150	100	50
G	TP205t0GRL15	CN200t0GRL15	200	150	50
G	TP305t0GRL20	CN300t0GRL20	300	200	50
G	TP455t0GRL30	CN450t0GRL30	450	300	50
G	TP605t0GRL45	CN600t0GRL45	600	450	50
H	TP105t0HRL05	CN100t0HRL05	100	50	50
H	TP155t0HRL10	CN150t0HRL10	150	100	50
H	TP205t0HRL15	CN200t0HRL15	200	150	50
H	TP305t0HRL20	CN300t0HRL20	300	200	50
H	TP455t0HRL30	CN450t0HRL30	450	300	50
H	TP605t0HRL45	CN600t0HRL45	600	450	50
A	Alu Zinc & Magnesium				
4	AISI 304	These finishes are available upon request.			
6	AISI 316				
8	AISI 316 L				
P	Powder Coated				

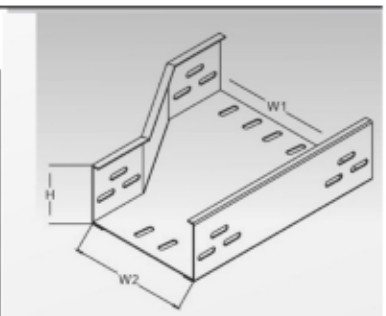

RR (Reducer Right)

Finish	Tray Model No.	Cover Model No.	Width (W1) mm	Width (W2) mm	Height (H) mm
G	TP105t0GRR05	CN100t0GRR05	100	50	50
G	TP155t0GRR10	CN150t0GRR10	150	100	50
G	TP205t0GRR15	CN200t0GRR15	200	150	50
G	TP305t0GRR20	CN300t0GRR20	300	200	50
G	TP455t0GRR30	CN450t0GRR30	450	300	50
G	TP605t0GRR45	CN600t0GRR45	600	450	50
H	TP105t0HRR05	CN100t0HRR05	100	50	50
H	TP155t0HRR10	CN150t0HRR10	150	100	50
H	TP205t0HRR15	CN200t0HRR15	200	150	50
H	TP305t0HRR20	CN300t0HRR20	300	200	50
H	TP455t0HRR30	CN450t0HRR30	450	300	50
H	TP605t0HRR45	CN600t0HRR45	600	450	50
A	Alu Zinc & Magnesium				
4	AISI 304	These finishes are available upon request.			
6	AISI 316				
8	AISI 316 L				
P	Powder Coated				

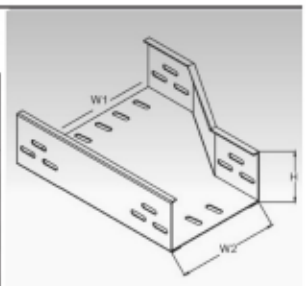

These accessories are also available in different heights.

Cable Tray's Accessories Range

RE (Reducer Equal)

Finish	Tray Model No.	Cover Model No.	Width (W1) mm	Width (W2) mm	Height (H) mm
G	TP105t0GRE05	CN100t0GRE05	100	50	50
G	TP155t0GRE10	CN150t0GRE10	150	100	50
G	TP205t0GRE15	CN200t0GRE15	200	150	50
G	TP305t0GRE20	CN300t0GRE20	300	200	50
G	TP455t0GRE30	CN450t0GRE30	450	300	50
G	TP605t0GRE45	CN600t0GRE45	600	450	50
H	TP105t0HRE05	CN100t0HRE05	100	50	50
H	TP155t0HRE10	CN150t0HRE10	150	100	50
H	TP205t0HRE15	CN200t0HRE15	200	150	50
H	TP305t0HRE20	CN300t0HRE20	300	200	50
H	TP455t0HRE30	CN450t0HRE30	450	300	50
H	TP605t0HRE45	CN600t0HRE45	600	450	50
A	Alu Zinc & Magnesium				
4	AISI 304	These finishes are available upon request.			
6	AISI 316				
8	AISI 316 L				
P	Powder Coated				

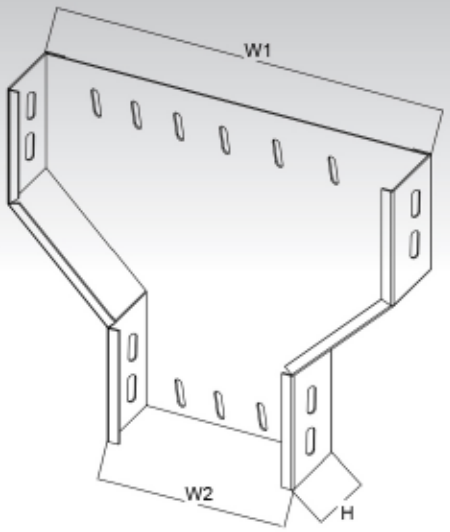

VU (Vertical Up Bend)

Finish	Tray Model No.	Cover Model No.	Width (W) mm	Height (H) mm
G	TP055t0GVU	CN050t0GVU	50	50
G	TP105t0GVU	CN100t0GVU	100	50
G	TP155t0GVU	CN150t0GVU	150	50
G	TP205t0GVU	CN200t0GVU	200	50
G	TP305t0GVU	CN300t0GVU	300	50
G	TP455t0GVU	CN450t0GVU	450	50
G	TP605t0GVU	CN600t0GVU	600	50
H	TP055t0HVU	CN050t0HVU	50	50
H	TP105t0HVU	CN100t0HVU	100	50
H	TP155t0HVU	CN150t0HVU	150	50
H	TP205t0HVU	CN200t0HVU	200	50
H	TP305t0HVU	CN300t0HVU	300	50
H	TP455t0HVU	CN450t0HVU	450	50
H	TP605t0HVU	CN600t0HVU	600	50
A	Alu Zinc & Magnesium			
4	AISI 304	These finishes are available upon request.		
6	AISI 316			
8	AISI 316 L			
P	Powder Coated			

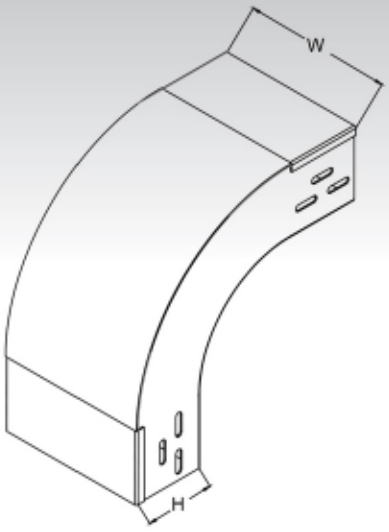

VD(Vertical Down Bend)

Finish	Tray Model No.	Cover Model No.	Width (W) mm	Height (H) mm
G	TP055t0GVD	CN050t0GVD	50	50
G	TP105t0GVD	CN100t0GVD	100	50
G	TP155t0GVD	CN150t0GVD	150	50
G	TP205t0GVD	CN200t0GVD	200	50
G	TP305t0GVD	CN300t0GVD	300	50
G	TP455t0GVD	CN450t0GVD	450	50
G	TP605t0GVD	CN600t0GVD	600	50
H	TP055t0HVD	CN050t0HVD	50	50
H	TP105t0HVD	CN100t0HVD	100	50
H	TP155t0HVD	CN150t0HVD	150	50
H	TP205t0HVD	CN200t0HVD	200	50
H	TP305t0HVD	CN300t0HVD	300	50
H	TP455t0HVD	CN450t0HVD	450	50
H	TP605t0HVD	CN600t0HVD	600	50
A	Alu Zinc & Magnesium			
4	AISI 304	These finishes are available upon request.		
6	AISI 316			
8	AISI 316 L			
P	Powder Coated			

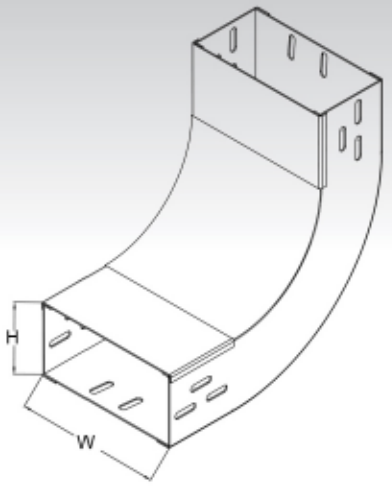

CABLE TRAY DIMENSIONS

Cable Tray's Accessories Range

ET (Extension Tee)

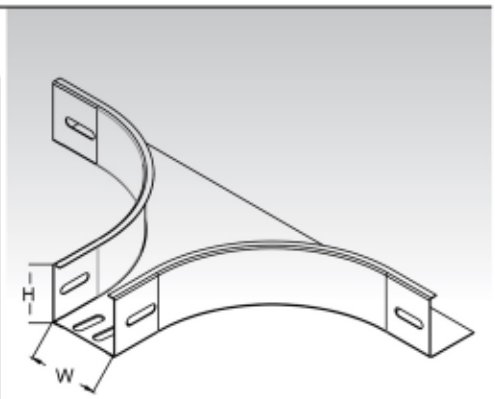

Finish	Tray Model No.	Cover Model No.	Width (W) mm	Height (H) mm
G	TP055t0GET	CN050t0GET	50	50
G	TP105t0GET	CN100t0GET	100	50
G	TP155t0GET	CN150t0GET	150	50
G	TP205t0GET	CN200t0GET	200	50
G	TP305t0GET	CN300t0GET	300	50
G	TP455t0GET	CN450t0GET	450	50
G	TP605t0GET	CN600t0GET	600	50
H	TP055t0HET	CN050t0HET	50	50
H	TP105t0HET	CN100t0HET	100	50
H	TP155t0HET	CN150t0HET	150	50
H	TP205t0HET	CN200t0HET	200	50
H	TP305t0HET	CN300t0HET	300	50
H	TP455t0HET	CN450t0HET	450	50
H	TP605t0HET	CN600t0HET	600	50
A	Alu Zinc & Magnesium	These finishes are available upon request.		
4	AISI 304			
6	AISI 316			
8	AISI 316 L			
P	Powder Coated			

Product height customization options are available depending upon request.

Standard thickness:

- 1.6 (0.8, 1.0, 1.2, 1.8 & 2.0 available on request).
- Upto 1.6 mm thickness is available for SS and Pre-Galvanized materials.
- Upto 2 mm thickness is available for Hot-Dip Galvanized materials.

Standard Length upto 3 mtrs is available.

NIEDAX

Cantilever

Splice Plate

Tee bend

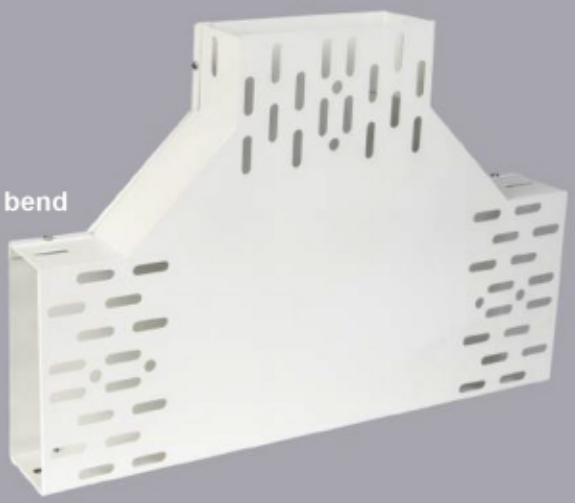

Cable Trays

Raceway

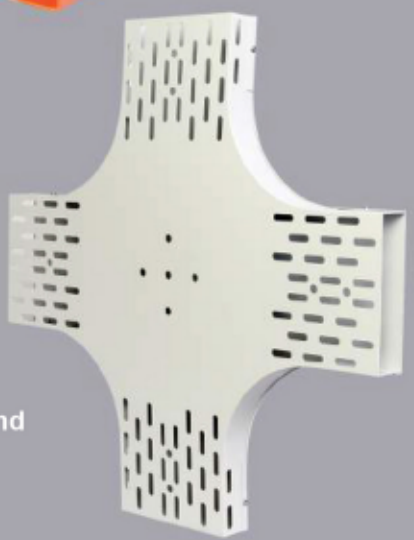

Cross Bend

RACEWAY DIMENSION

Profile Design Raceways

Finish	Tray Model No.	Cover Model No.	Width (W) mm	Height (H) mm
G	RN055tlG	ZN050tlG	50	50
G	RN105tlG	ZN100tlG	100	50
G	RN155tlG	ZN150tlG	150	50
G	RN205tlG	ZN200tlG	200	50
G	RN305tlG	ZN300tlG	300	50
G	RN455tlG	ZN450tlG	450	50
G	RN605tlG	ZN600tlG	600	50
H	RN055tlH	ZN050tlH	50	50
H	RN105tlH	ZN100tlH	100	50
H	RN155tlH	ZN150tlH	150	50
H	RN205tlH	ZN200tlH	200	50
H	RN305tlH	ZN300tlH	300	50
H	RN455tlH	ZN450tlH	450	50
H	RN605tlH	ZN600tlH	600	50
A	Alu Zinc & Magnesium			
4	AISI 304	These finishes are available upon request.		
6	AISI 316			
8	AISI 316 L			
P	Powder Coated			

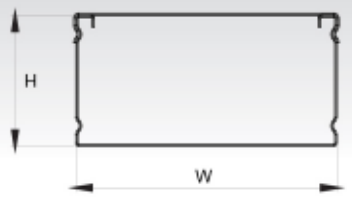

Profile Design Raceways

Finish	Tray Model No.	Cover Model No.	Width (W) mm	Height (H) mm
G	RN055tlG	ZN050tlG	50	75
G	RN105tlG	ZN100tlG	100	75
G	RN155tlG	ZN150tlG	150	75
G	RN205tlG	ZN200tlG	200	75
G	RN305tlG	ZN300tlG	300	75
G	RN455tlG	ZN450tlG	450	75
G	RN605tlG	ZN600tlG	600	75
H	RN055tlH	ZN050tlH	50	75
H	RN105tlH	ZN100tlH	100	75
H	RN155tlH	ZN150tlH	150	75
H	RN205tlH	ZN200tlH	200	75
H	RN305tlH	ZN300tlH	300	75
H	RN455tlH	ZN450tlH	450	75
H	RN605tlH	ZN600tlH	600	75
A	Alu Zinc & Magnesium			
4	AISI 304	These finishes are available upon request.		
6	AISI 316			
8	AISI 316 L			
P	Powder Coated			

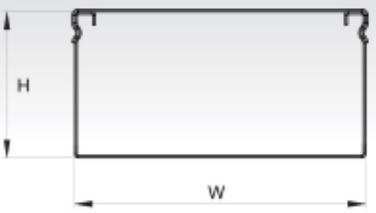

Profile Design Raceways

Finish	Tray Model No.	Cover Model No.	Width (W) mm	Height (H) mm
G	RN055tlG	ZN050tlG	50	100
G	RN105tlG	ZN100tlG	100	100
G	RN155tlG	ZN150tlG	150	100
G	RN205tlG	ZN200tlG	200	100
G	RN305tlG	ZN300tlG	300	100
G	RN455tlG	ZN450tlG	450	100
G	RN605tlG	ZN600tlG	600	100
H	RN055tlH	ZN050tlH	50	100
H	RN105tlH	ZN100tlH	100	100
H	RN155tlH	ZN150tlH	150	100
H	RN205tlH	ZN200tlH	200	100
H	RN305tlH	ZN300tlH	300	100
H	RN455tlH	ZN450tlH	450	100
H	RN605tlH	ZN600tlH	600	100
A	Alu Zinc & Magnesium			
4	AISI 304	These finishes are available upon request.		
6	AISI 316			
8	AISI 316 L			
P	Powder Coated			

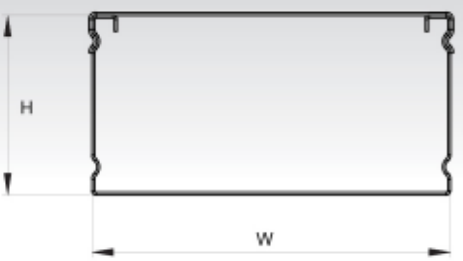

Raceways Accessories Range

45° Horizontal Bend

Finish	Tray Model No.	Cover Model No.	Width (W) mm	Height (H) mm
G	TN055t0GH4	CN050t0GH4	50	50
G	TN105t0GH4	CN100t0GH4	100	50
G	TN155t0GH4	CN150t0GH4	150	50
G	TN205t0GH4	CN200t0GH4	200	50
G	TN305t0GH4	CN300t0GH4	300	50
G	TN455t0GH4	CN450t0GH4	450	50
G	TN605t0GH4	CN600t0GH4	600	50
H	TN055t0HH4	CN050t0HH4	50	50
H	TN105t0HH4	CN100t0HH4	100	50
H	TN155t0HH4	CN150t0HH4	150	50
H	TN205t0HH4	CN200t0HH4	200	50
H	TN305t0HH4	CN300t0HH4	300	50
H	TN455t0HH4	CN450t0HH4	450	50
H	TN605t0HH4	CN600t0HH4	600	50
A	Alu Zinc & Magnesium			
4	AISI 304	These finishes are available upon request.		
6	AISI 316			
8	AISI 316 L			
P	Powder Coated			

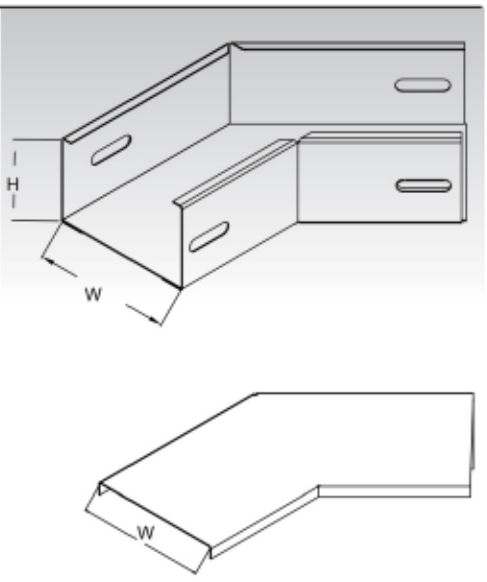

45° Vertical Bend

Finish	Tray Model No.	Cover Model No.	Width (W) mm	Height (H) mm
G	TN055t0GV4	CN050t0GV4	50	50
G	TN105t0GV4	CN100t0GV4	100	50
G	TN155t0GV4	CN150t0GV4	150	50
G	TN205t0GV4	CN200t0GV4	200	50
G	TN305t0GV4	CN300t0GV4	300	50
G	TN455t0GV4	CN450t0GV4	450	50
G	TN605t0GV4	CN600t0GV4	600	50
H	TN055t0HV4	CN050t0HV4	50	50
H	TN105t0HV4	CN100t0HV4	100	50
H	TN155t0HV4	CN150t0HV4	150	50
H	TN205t0HV4	CN200t0HV4	200	50
H	TN305t0HV4	CN300t0HV4	300	50
H	TN455t0HV4	CN450t0HV4	450	50
H	TN605t0HV4	CN600t0HV4	600	50
A	Alu Zinc & Magnesium			
4	AISI 304	These finishes are available upon request.		
6	AISI 316			
8	AISI 316 L			
P	Powder Coated			

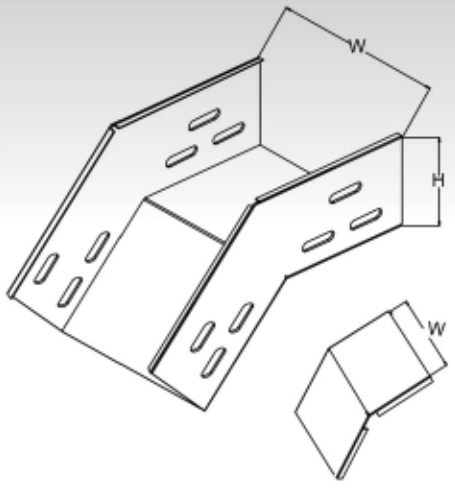

These accessories are available in 30° and 90° options.

TB (Tee Bend)

Finish	Tray Model No.	Cover Model No.	Width (W) mm	Height (H) mm
G	TN055t0GTB	CN050t0GTB	50	50
G	TN105t0GTB	CN100t0GTB	100	50
G	TN155t0GTB	CN150t0GTB	150	50
G	TN205t0GTB	CN200t0GTB	200	50
G	TN305t0GTB	CN300t0GTB	300	50
G	TN455t0GTB	CN450t0GTB	450	50
G	TN605t0GTB	CN600t0GTB	600	50
H	TN055t0HTB	CN050t0HTB	50	50
H	TN105t0HTB	CN100t0HTB	100	50
H	TN155t0HTB	CN150t0HTB	150	50
H	TN205t0HTB	CN200t0HTB	200	50
H	TN305t0HTB	CN300t0HTB	300	50
H	TN455t0HTB	CN450t0HTB	450	50
H	TN605t0HTB	CN600t0HTB	600	50
A	Alu Zinc & Magnesium			
4	AISI 304	These finishes are available upon request.		
6	AISI 316			
8	AISI 316 L			
P	Powder Coated			

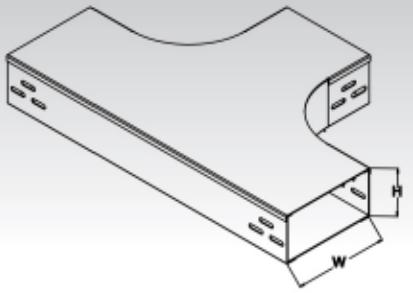

These accessories are also available in different heights.

RACEWAY DIMENSION

Raceways Accessories Range

CB (Cross Bend)

Finish	Tray Model No.	Cover Model No.	Width (W) mm	Height (H) mm
G	TN055t0GCB	CN050t0GCB	50	50
G	TN105t0GCB	CN100t0GCB	100	50
G	TN155t0GCB	CN150t0GCB	150	50
G	TN205t0GCB	CN200t0GCB	200	50
G	TN305t0GCB	CN300t0GCB	300	50
G	TN455t0GCB	CN450t0GCB	450	50
G	TN605t0GCB	CN600t0GCB	600	50
H	TN055t0HCB	CN050t0HCB	50	50
H	TN105t0HCB	CN100t0HCB	100	50
H	TN155t0HCB	CN150t0HCB	150	50
H	TN205t0HCB	CN200t0HCB	200	50
H	TN305t0HCB	CN300t0HCB	300	50
H	TN455t0HCB	CN450t0HCB	450	50
H	TN605t0HCB	CN600t0HCB	600	50
A	Alu Zinc & Magnesium			
4	AISI 304	These finishes are available upon request.		
6	AISI 316			
8	AISI 316 L			
P	Powder Coated			

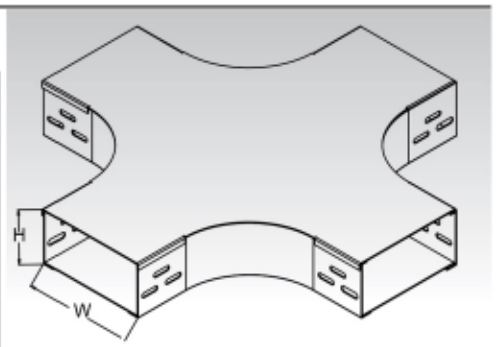

RL (Reducer Left)

Finish	Tray Model No.	Cover Model No.	Width (W1) mm	Width (W2) mm	Height (H) mm
G	TN105t0GRL05	CN100t0GRL05	100	50	50
G	TN155t0GRL10	CN150t0GRL10	150	100	50
G	TN205t0GRL15	CN200t0GRL15	200	150	50
G	TN305t0GRL20	CN300t0GRL20	300	200	50
G	TN455t0GRL30	CN450t0GRL30	450	300	50
G	TN605t0GRL45	CN600t0GRL45	600	450	50
H	TN105t0HRL05	CN100t0HRL05	100	50	50
H	TN155t0HRL10	CN150t0HRL10	150	100	50
H	TN205t0HRL15	CN200t0HRL15	200	150	50
H	TN305t0HRL20	CN300t0HRL20	300	200	50
H	TN455t0HRL30	CN450t0HRL30	450	300	50
H	TN605t0HRL45	CN600t0HRL45	600	450	50
A	Alu Zinc & Magnesium				
4	AISI 304	These finishes are available upon request.			
6	AISI 316				
8	AISI 316 L				
P	Powder Coated				

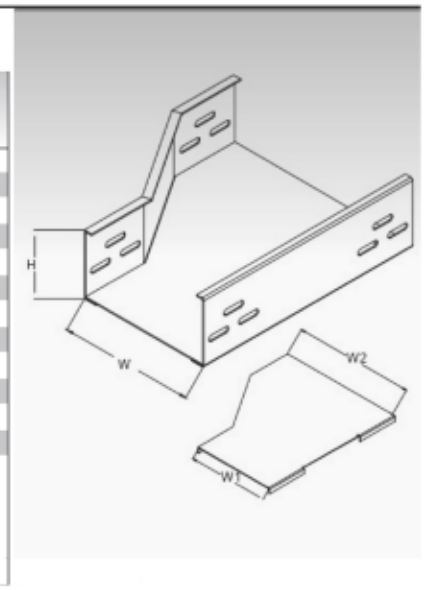

RR (Reducer Right)

Finish	Tray Model No.	Cover Model No.	Width (W1) mm	Width (W2) mm	Height (H) mm
G	TN105t0GRR05	CN100t0GRR05	100	50	50
G	TN155t0GRR10	CN150t0GRR10	150	100	50
G	TN205t0GRR15	CN200t0GRR15	200	150	50
G	TN305t0GRR20	CN300t0GRR20	300	200	50
G	TN455t0GRR30	CN450t0GRR30	450	300	50
G	TN605t0GRR45	CN600t0GRR45	600	450	50
H	TN105t0HRR05	CN100t0HRR05	100	50	50
H	TN155t0HRR10	CN150t0HRR10	150	100	50
H	TN205t0HRR15	CN200t0HRR15	200	150	50
H	TN305t0HRR20	CN300t0HRR20	300	200	50
H	TN455t0HRR30	CN450t0HRR30	450	300	50
H	TN605t0HRR45	CN600t0HRR45	600	450	50
A	Alu Zinc & Magnesium				
4	AISI 304	These finishes are available upon request.			
6	AISI 316				
8	AISI 316 L				
P	Powder Coated				

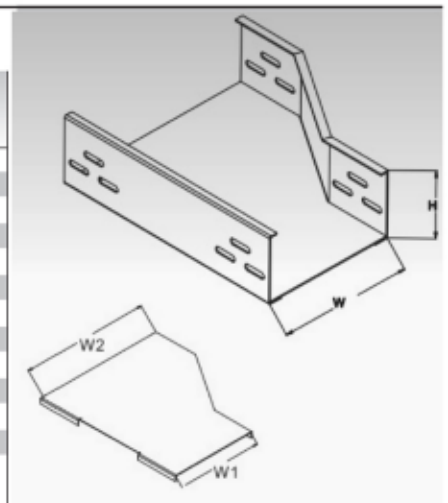

These accessories are also available in different heights.

Raceways Accessories Range

RE (Reducer Equal)

Finish	Tray Model No.	Cover Model No.	Width (W1) mm	Width (W2) mm	Height (H) mm
G	TN105t0GRE05	CN100t0GRE05	100	50	50
G	TN155t0GRE10	CN150t0GRE10	150	100	50
G	TN205t0GRE15	CN200t0GRE15	200	150	50
G	TN305t0GRE20	CN300t0GRE20	300	200	50
G	TN455t0GRE30	CN450t0GRE30	450	300	50
G	TN605t0GRE45	CN600t0GRE45	600	450	50
H	TN105t0HRE05	CN100t0HRE05	100	50	50
H	TN155t0HRE10	CN150t0HRE10	150	100	50
H	TN205t0HRE15	CN200t0HRE15	200	150	50
H	TN305t0HRE20	CN300t0HRE20	300	200	50
H	TN455t0HRE30	CN450t0HRE30	450	300	50
H	TN605t0HRE45	CN600t0HRE45	600	450	50
A	Alu Zinc & Magnesium				
4	AISI 304	These finishes are available upon request.			
6	AISI 316				
8	AISI 316 L				
P	Powder Coated				

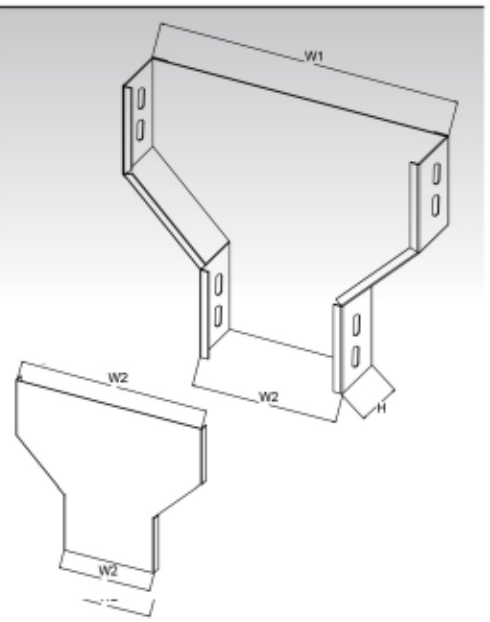

VU (Vertical Up Bend)

Finish	Tray Model No.	Cover Model No.	Width (W) mm	Height (H) mm
G	TN055t0GVU	CN050t0GVU	50	50
G	TN105t0GVU	CN100t0GVU	100	50
G	TN155t0GVU	CN150t0GVU	150	50
G	TN205t0GVU	CN200t0GVU	200	50
G	TN305t0GVU	CN300t0GVU	300	50
G	TN455t0GVU	CN450t0GVU	450	50
G	TN605t0GVU	CN600t0GVU	600	50
H	TN055t0HVU	CN050t0HVU	50	50
H	TN105t0HVU	CN100t0HVU	100	50
H	TN155t0HVU	CN150t0HVU	150	50
H	TN205t0HVU	CN200t0HVU	200	50
H	TN305t0HVU	CN300t0HVU	300	50
H	TN455t0HVU	CN450t0HVU	450	50
H	TN605t0HVU	CN600t0HVU	600	50
A	Alu Zinc & Magnesium			
4	AISI 304	These finishes are available upon request.		
6	AISI 316			
8	AISI 316 L			
P	Powder Coated			

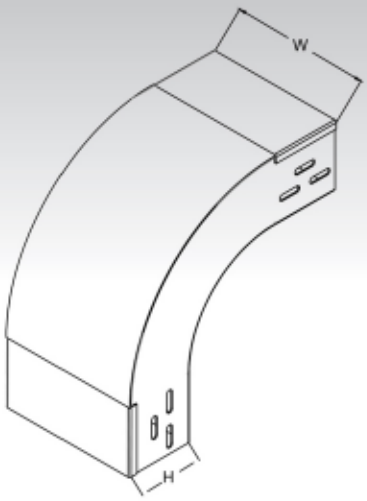

VD(Vertical Down Bend)

Finish	Tray Model No.	Cover Model No.	Width (W) mm	Height (H) mm
G	TP055t0GVD	CN050t0GVD	50	50
G	TP105t0GVD	CN100t0GVD	100	50
G	TP155t0GVD	CN150t0GVD	150	50
G	TP205t0GVD	CN200t0GVD	200	50
G	TP305t0GVD	CN300t0GVD	300	50
G	TP455t0GVD	CN450t0GVD	450	50
G	TP605t0GVD	CN600t0GVD	600	50
H	TP055t0HVD	CN050t0HVD	50	50
H	TP105t0HVD	CN100t0HVD	100	50
H	TP155t0HVD	CN150t0HVD	150	50
H	TP205t0HVD	CN200t0HVD	200	50
H	TP305t0HVD	CN300t0HVD	300	50
H	TP455t0HVD	CN450t0HVD	450	50
H	TP605t0HVD	CN600t0HVD	600	50
A	Alu Zinc & Magnesium			
4	AISI 304	These finishes are available upon request.		
6	AISI 316			
8	AISI 316 L			
P	Powder Coated			

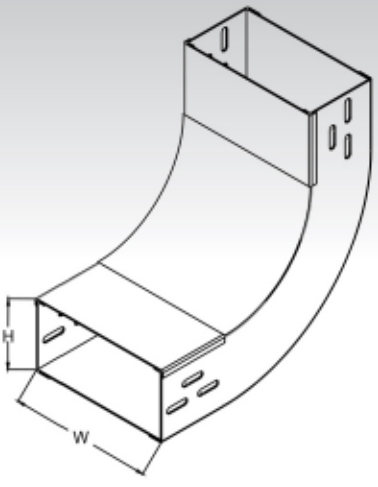

RACEWAY DIMENSION

Raceways Accessories Range

ET (Extension Tee)

Finish	Tray Model No.	Cover Model No.	Width (W) mm	Height (H) mm
G	TP055t0GET	CN050t0GET	50	50
G	TP105t0GET	CN100t0GET	100	50
G	TP155t0GET	CN150t0GET	150	50
G	TP205t0GET	CN200t0GET	200	50
G	TP305t0GET	CN300t0GET	300	50
G	TP455t0GET	CN450t0GET	450	50
G	TP605t0GET	CN600t0GET	600	50
H	TP055t0HET	CN050t0HET	50	50
H	TP105t0HET	CN100t0HET	100	50
H	TP155t0HET	CN150t0HET	150	50
H	TP205t0HET	CN200t0HET	200	50
H	TP305t0HET	CN300t0HET	300	50
H	TP455t0HET	CN450t0HET	450	50
H	TP605t0HET	CN600t0HET	600	50
A	Alu Zinc & Magnesium	These finishes are available upon request.		
4	AISI 304			
6	AISI 316			
8	AISI 316 L			
P	Powder Coated			

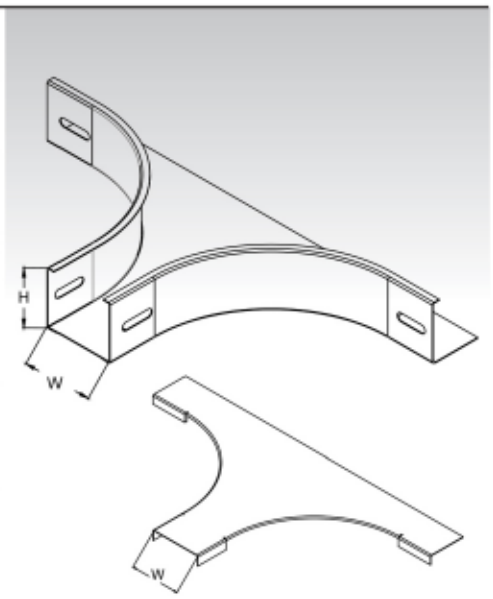

Product height customization options are available depending upon request.

Standard thickness:

- 1.6 (0.8, 1.0, 1.2, 1.8 & 2.0 available on request).
- Upto 1.6 mm thickness is available for SS and Pre-Galvanized materials.
- Upto 2 mm thickness is available for Hot-Dip Galvanized materials.

Standard Length upto 3 mtrs is available.

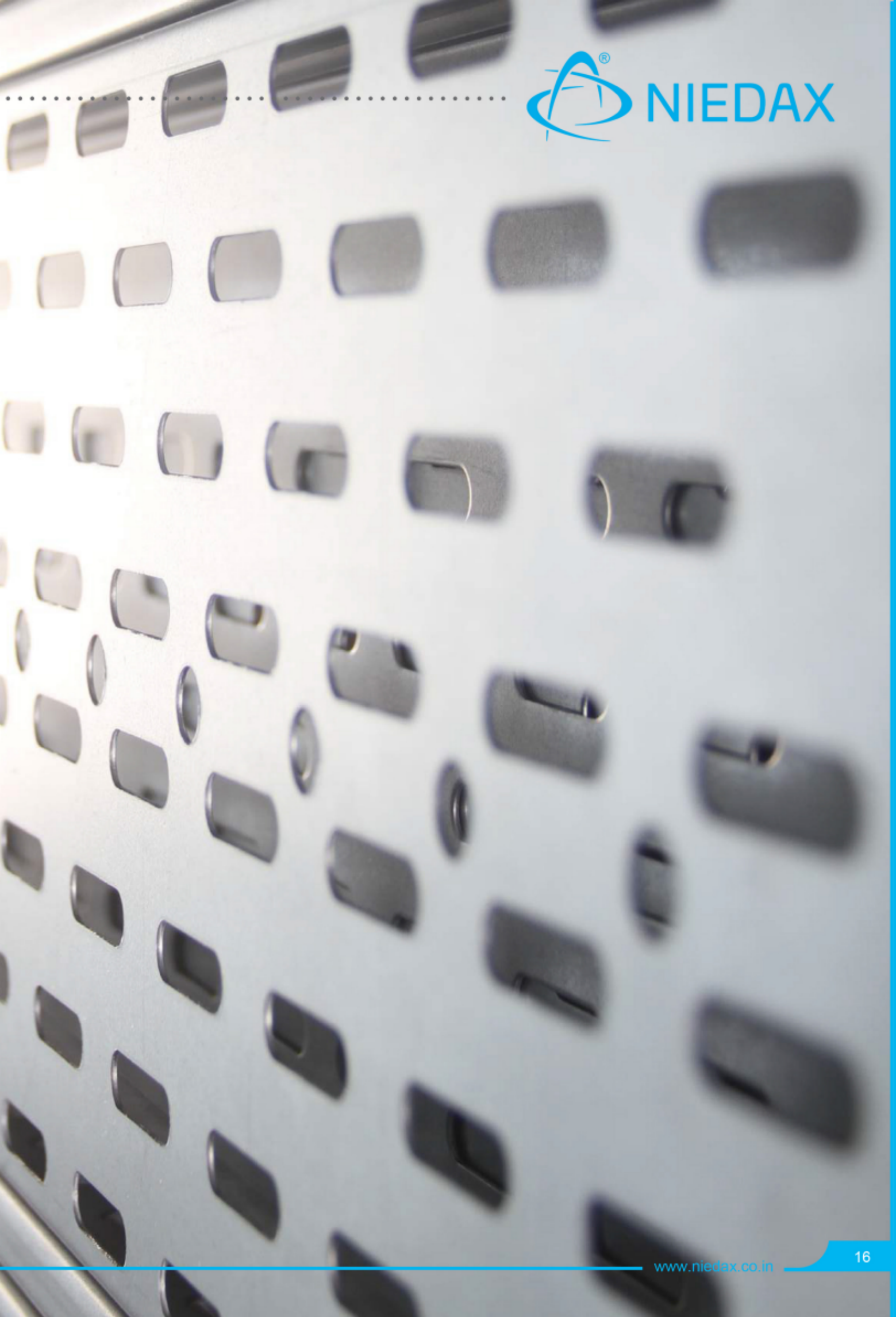

STANDARDS & CERTIFICATES

NIEDAX

CE

EU DECLARATION OF CONFORMITY

(As per Low Voltage Directive 2014/35/EU Annex III – Para 3)

Manufacturer/Assembler: Niedax India Cable Management Systems Private Limited
Plot No. 143/C-4, Bommasandra Industrial Area,
Hosur Road, Anekal Taluk, Bangalore, Karnataka – 560 099 (INDIA).
Tel No.: +91-80-29766811
Web: www.niedax.co.in

Description of Items: Cable Trays and Allied Accessories with support systems.
(SS, HDG, Powder coated & Pre-Galvanized Type)
Intended Application: To support insulated cables.

We, Niedax India Cable Management Systems Private Limited, Bangalore hereby declare that the above product (Cable Trays and Allied Accessories with support systems) fulfills all of the relevant requirements of applicable EU Directive and details of which are contained in the Technical Construction File

EU Directive Applied :
Low Voltage Directive 2014/35/EU

The following harmonized standard were used.

EN 61537:2007 : Management - Cable Tray Systems and Cable Ladder Systems.

This said product shall not be put into service along with any other equipment without establishing the conformity of the same to the corresponding EU directives.

The criteria for selection safety requirements of other associated equipments and installation guidelines are detailed in the Instruction Manual.

Marking: CE

Year of First CE Marking: 05/2019

Year of Manufacture: 03/2018

AUTHORIZED SIGNATORY:

Name : Mr. Arshad Hussain
Position : Managing Director
Date. : 29.05.2019
Place : Bangalore

Signature

First CE Certified
Cable Tray Manufacturer in India...

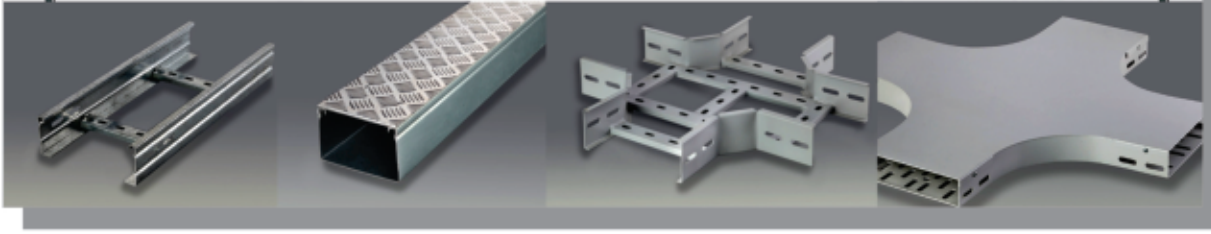

SGS

TEST REPORT

Report No. : MAN:HL:1348005583 **DATE : 15th July, 2022**

NIEDAX INDIA CABLE MANAGEMENT SYSTEM PVT. LTD
143/C-4 BOMMASANDRA INDUSTRIAL AREA HOSUR MAIN ROAD
ANEKAL TALUK, BANGALORE- 560099
INDIA
CONTACT PERSON : AADITH

THE FOLLOWING SAMPLE(S) WAS/WERE SUBMITTED AND IDENTIFIED BY/ON BEHALF OF THE CUSTOMER AS :

SAMPLE DESCRIPTION	HOT DIP GALVANIZED CABLE TRAY
COLOUR	ZINC BLUE
ORDER NO.	202205/01559
COUNTRY OF DESTINATION	INDIA
COUNTRY OF ORIGIN	INDIA
SAMPLE RECD ON	28/06/2022
TEST PERFORMING DATE	28/06/2022 TO 14/07/2022

TEST REQUESTED Two hundred and twenty-three (223) substances in the Candidate List of Substances of Very High Concern (SVHC) for authorization published by European Chemicals Agency (ECHA) on and before Jan 17, 2022 regarding Regulation (EC) No 1907/2006 concerning the REACH.

SUMMARY:

According to the specified scope and analytical techniques, concentrations of tested SVHC are ≤ 0.1% (w/w) in the submitted sample.	PASS

TEST METHOD & RESULT(S) PLEASE REFER TO NEXT PAGE(S)

Per Pro SGS India Pvt. Ltd.

SANDIP BHUSHAN (Technical Manager)
Authorized Signatory
Email your Test Report Related Enquiries at Feedback.HLT@ss.com

This document is issued by the Company subject to its General Conditions of Service printed overleaf, available on request or accessible at http://www.sgs.com/terms and, for electronic format documents, subject to Terms and Conditions for Electronic Documents at www.sgs.com/terms_e-document.htm. Attention is drawn to the limitation of liability, indemnification and jurisdiction issues defined therein. Any holder of this document is advised that information contained hereon reflects the Company's findings at the time of its intervention only and within the limits of Client's instructions, if any. The Company's sole responsibility is to its Client and this document does not exonerate parties to a transaction from exercising all their rights and obligations under the transaction documents. This document cannot be reproduced except in full, without prior written approval of the Company. Any unauthorized alteration, forgery or falsification of the content or appearance of this document is unlawful and offenders may be prosecuted to the fullest extent of the law." Unless otherwise stated the results shown in this test report refer only to the sample(s) tested and such sample(s) are retained for 30 days only.
Connectivity and Products, Testing Laboratory, Plot no. 21, Sector 3, IMT Manesar, Gurugram District, Haryana- 122050 (India) t: (+91-124 678 7600
SGS India Pvt. Ltd
www.sgs.com
Member of the SGS Group (SGS SA)

ITC INDIA

INSTITUTE OF TESTING AND CERTIFICATION (INDIA) PVT. LTD.

Sr. No.	Requirement/Conditions	Result/Remarks	Verdict
1	**Wind Load Test**		
-	**V** is the wind speed (m/s) **V:** 28 m/s Wind impact Points: 4	In Compliance During the Test, sample was intact and no damage was observed.	P
-	After the Test, there shall be no visible failure impairing the safety.		P

Test Setup

*****END OF REPORT*****

Institute of Testing and Certification (India) Pvt. Ltd.

Authorised Signatory

STANDARDS & CERTIFICATES

BUREAU VERITAS

Bureau Veritas Certification

NIEDAX INDIA CABLE MANAGEMENT SYSTEMS PVT. LTD.

NIEDAX

PLOT # 143/C-4, BOMMASANDRA INDUSTRIAL AREA, HOSUR ROAD,
ANEKAL TALUK, BANGALORE – 560 099, KARNATAKA, INDIA.

Bureau Veritas Certification Holding SAS – UK Branch certifies that the Management System of the above organization has been audited and found to be in accordance with the requirements of the Management System standards detailed below.

Standards

ISO 9001:2015 & ISO 45001:2018

Scope of certification

DESIGN, DEVELOPMENT, MANUFACTURING AND SUPPLY OF CABLE SUPPORT SYSTEMS.

Original cycle start date:	**15 October 2020**
Expiry date of previous cycle:	**Not Applicable**
Certification Audit date:	**25 August 2020**
Certification cycle start date:	**15 October 2020**

Subject to the continued satisfactory operation of the organization's Managem
this certificate expires on: **14 October 2023**

Certificate No. **IND.20.3212/IM/U** Version : **1** Revision date: **15 October 2020**

Signed on behalf of BVCH SAS – UK Branch
Jagdheesh N. MANIAN
Head – CERTIFICATION, South Asia
Commodities, Industry & Facilities Division

UKAS MANAGEMENT SYSTEMS
0008

Certification body address: *5th Floor, 66 Prescot Street, London, E1 8HG, United Kingdom.*

Local office: *Bureau Veritas (India) Private Limited (Certification Business) 72 Business Park, Marol Industrial Area, MIDC Cross Road "C", Andheri (East), Mumbai – 400 093, India.*

Further clarifications regarding the scope of this certificate and the applicability of the management system requirements may be obtained by consulting the organization.
To check this certificate validity please call **+91 22 6274 2000.**

BUREAU VERITAS

Ref:BVIPL:SPL: BL/873(b)/3/2018 Date : 14.3.2018
Test Order dated: 10.3.18

M/s Niedax India Cable Management Systems Private Limited
1007, Level 10, Prestige Meridian I
No. 29, M.G. Road, Bangalore 560 001

TEST REPORT ON CABLE TRAY SAMPLE

Source of sample	:	Sample supplied by the customer
Customer Reference	:	Letter dated 10.3.18
UIN	:	18008649
Project*	:	Not furnished
Date of test	:	13.3.18
Sample description*	:	Perforated Cable Tray
Size of the sample*	:	400 (W) x 100 (H) x 2500 mm (L) & 2 mm thick
Span	:	2350 mm
Bearing	:	75 mm
Condition of sample	:	Satisfactory
Test Method	:	NEMA VE 1 (National Electrical Manufactures Association)

LOAD TEST :

Sl. No.	Applied Load (kg)	Central Deflection (mm)	Observation
1	0	0	No Permanent Deformation Observed
2	20	0.81	
3	40	1.73	
4	60	2.75	
5	80	4.32	
6	100	19.07	
7	120	23.58	
8	120 kg (After 15 minutes)	23.58	
9	Residual (0 kg) (After 15 minutes)	0.89	
10	Max. Failure Load (kg)	900	Permanent Deformation Observed

* As furnished by the customer

Note: 1. The results relate only to the items tested.
2. Report shall not be reproduced, except in full, without the written approval of the lab.
3. Any correction invalidates this report.

for **BUREAU VERITAS (INDIA) PRIVATE LIMITED**
Construction Services Laboratory

14/03/2018
SANJEEV PATGAR
Manager LAB

348804

NIEDAX INDIA CABLE MANAGEMENT SYSTEMS PVT. LTD. BANGALORE

Bureau Veritas (India) Private Limited
(Construction Services Laboratory)
43, 45-47, Pete Chennappa Inds. Estate, 1st Main
Magadi Road, Kamakshipalya, Bangalore - 560 079
Tel.: +91 80 23011800 Fax: +91 80 26716833
bangalore.lab@in.bureauveritas.com

Regd. Off. : 72 Business Park, Ground Floor
Marol Industrial Area, MIDC, Cross Road 'C'
Andheri (East), Mumbai - 400 093. INDIA
Tel.: +91 22 62742000 Fax: +91 22 62742008
www.bureauveritas.co.in
CIN: U74210MH2001PTC134262

Offices/Labs at: Ahmedabad, Baroda
Bhopal, Chennai, Cochin, Coimbatore
Delhi, Goa, Hubli, Hyderabad, Indore
Jaipur, Kakinada, Kandla, Kolkata, Ludhiana
Mangalore, Nagpur, Nashik, Pune, Raipur
Surat, Trichy & Visakhapatnam

STANDARDS & CERTIFICATES

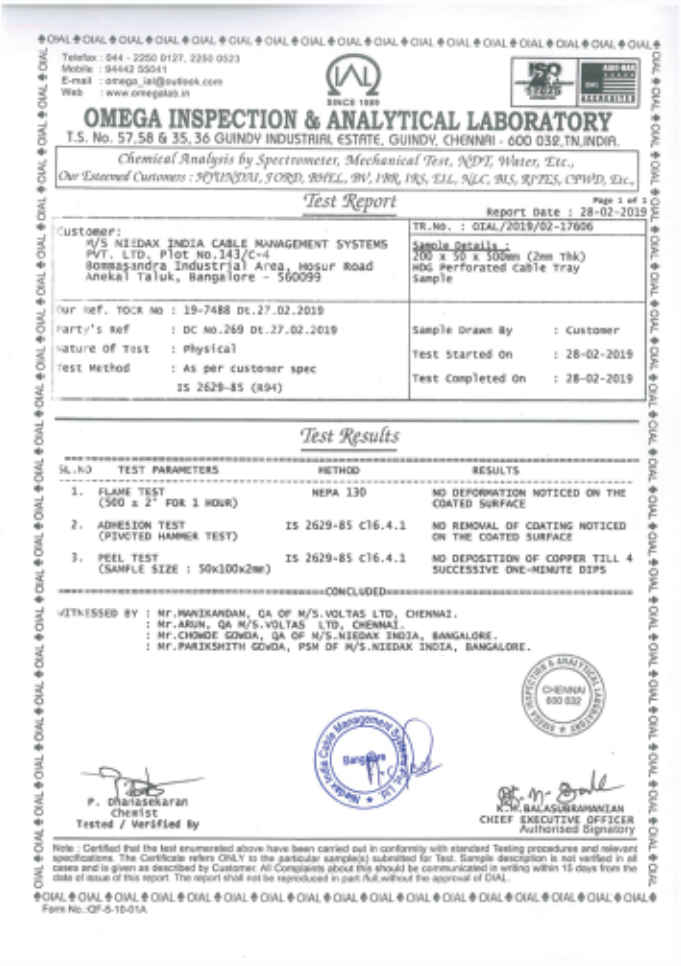

Telefax : 044 - 2250 0127, 2250 0523
Mobile : 94442 55041
E-mail : omega_lal@outlook.com
Web : www.omegalab.in

SINCE 1989

OMEGA INSPECTION & ANALYTICAL LABORATORY

T.S. No. 57,58 & 35, 36 GUINDY INDUSTRIAL ESTATE, GUINDY, CHENNAI - 600 032, TN, INDIA.

Chemical Analysis by Spectrometer, Mechanical Test, NDT, Water, Etc.,
Our Esteemed Customers : HYUNDAI, FORD, BHEL, BV, IRR, IRS, L&T, NLC, BIS, RITES, CPWD, Etc.,

Test Report

Page 1 of 1

Report Date : 28-02-2019

Customer: M/S NIEDAX INDIA CABLE MANAGEMENT SYSTEMS PVT. LTD, Plot No.143/C-4 Bommasandra Industrial Area, Hosur Road Anekal Taluk, Bangalore - 560099	TR.No. : OIAL/2019/02-17606 Sample Details : 200 x 50 x 500mm (2mm Thk) HDG Perforated Cable Tray Sample
Our Ref. TOCR No : 19-7488 Dt.27.02.2019 Party's Ref : DC No.269 Dt.27.02.2019 Nature of Test : Physical Test Method : As per customer spec IS 2629-85 (R94)	Sample Drawn By : Customer Test Started On : 28-02-2019 Test Completed On : 28-02-2019

Test Results

Sl.No	TEST PARAMETERS	METHOD	RESULTS
1.	FLAME TEST (500 ± 2° FOR 1 HOUR)	NEPA 130	NO DEFORMATION NOTICED ON THE COATED SURFACE
2.	ADHESION TEST (PIVOTED HAMMER TEST)	IS 2629-85 c16.4.1	NO REMOVAL OF COATING NOTICED ON THE COATED SURFACE
3.	PEEL TEST (SAMPLE SIZE : 50x100x2mm)	IS 2629-85 c16.4.1	NO DEPOSITION OF COPPER TILL 4 SUCCESSIVE ONE-MINUTE DIPS

----------CONCLUDED----------

WITNESSED BY : Mr.MANIKANDAN, QA OF M/S.VOLTAS LTD, CHENNAI.
: Mr.ARUN, QA M/S.VOLTAS LTD, CHENNAI.
: Mr.CHOWDE GOWDA, QA OF M/S.NIEDAX INDIA, BANGALORE.
: Mr.PARIKSHITH GOWDA, PSM OF M/S.NIEDAX INDIA, BANGALORE.

P. Dhanasekaran
Chemist
Tested / Verified By

K.M. BALASUBRAMANIAN
CHIEF EXECUTIVE OFFICER
Authorised Signatory

Note : Certified that the test enumerated above have been carried out in conformity with standard Testing procedures and relevant specifications. The Certificate refers ONLY to the particular sample(s) submitted for Test. Sample description is not verified in all cases and is given as described by Customer. All Complaints about this should be communicated in writing within 15 days from the date of issue of this report. The report shall not be reproduced in part /full,without the approval of OIAL.

Form No.:QF-5-10-01A

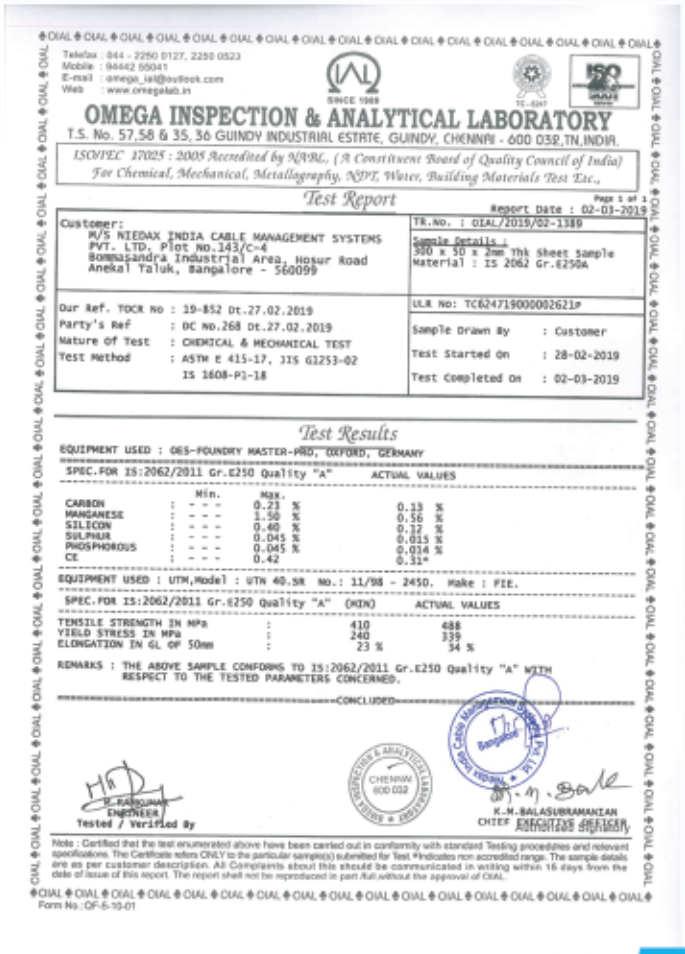

Telefax : 044 - 2250 0127, 2250 0523
Mobile : 94442 55041
E-mail : omega_lal@outlook.com
Web : www.omegalab.in

SINCE 1989

TC-4247

OMEGA INSPECTION & ANALYTICAL LABORATORY

T.S. No. 57,58 & 35, 36 GUINDY INDUSTRIAL ESTATE, GUINDY, CHENNAI - 600 032, TN, INDIA.

ISO/IEC 17025 : 2005 Accredited by NABL, (A Constituent Board of Quality Council of India)
For Chemical, Mechanical, Metallography, NDT, Water, Building Materials Test Etc.,

Test Report

Page 1 of 1

Report Date : 02-03-2019

Customer: M/S NIEDAX INDIA CABLE MANAGEMENT SYSTEMS PVT. LTD, Plot No.143/C-4 Bommasandra Industrial Area, Hosur Road Anekal Taluk, Bangalore - 560099	TR.No. : OIAL/2019/02-1389 Sample Details : 500 x 50 x 2mm Thk Sheet Sample Material : IS 2062 Gr.E250A
Our Ref. TOCR No : 19-852 Dt.27.02.2019 Party's Ref : DC No.268 Dt.27.02.2019 Nature of Test : CHEMICAL & MECHANICAL TEST Test Method : ASTM E 415-17, JIS G1253-02 IS 1608-P1-18	ULR No: TC624719000002621P Sample Drawn By : Customer Test Started On : 28-02-2019 Test Completed On : 02-03-2019

Test Results

EQUIPMENT USED : OES-FOUNDRY MASTER-PRO, OXFORD, GERMANY

SPEC.FOR IS:2062/2011 Gr.E250 Quality "A"	Min.	Max.	ACTUAL VALUES
CARBON	: - - -	0.23 %	0.13 %
MANGANESE	: - - -	1.50 %	0.56 %
SILICON	: - - -	0.40 %	0.32 %
SULPHUR	: - - -	0.045 %	0.015 %
PHOSPHOROUS	: - - -	0.045 %	0.034 %
CE	: - - -	0.42	0.31*

EQUIPMENT USED : UTM,Model : UTN 40.5R No.: 11/98 - 2450, Make : FIE.

SPEC.FOR IS:2062/2011 Gr.E250 Quality "A"	(MIN)	ACTUAL VALUES
TENSILE STRENGTH IN MPa	: 410	488
YIELD STRESS IN MPa	: 240	339
ELONGATION IN GL OF 50mm	: 23 %	34 %

REMARKS : THE ABOVE SAMPLE CONFORMS TO IS:2062/2011 Gr.E250 Quality "A" WITH RESPECT TO THE TESTED PARAMETERS CONCERNED.

----------CONCLUDED----------

M.RANGANATH
ENGINEER
Tested / Verified By

K.M. BALASUBRAMANIAN
CHIEF EXECUTIVE OFFICER
Authorised Signatory

Note : Certified that the test enumerated above have been carried out in conformity with standard Testing procedures and relevant specifications. The Certificate refers ONLY to the particular sample(s) submitted for Test. *Indicates non accredited range. The sample details are as per customer description. All Complaints about this should be communicated in writing within 15 days from the date of issue of this report. The report shall not be reproduced in part /full,without the approval of OIAL.

Form No.:QF-5-10-01

PRODUCTS STANDARDS & PERFORMANCES

IEC / EN-61537
NEMA-VE1

Thinner Profile Design is much Stronger than Thicker Standard Design

Test product : Perforated Cable Tray (Conventional)	Span (m)	Load at Span(Kg)	Test product : Perforated Cable Tray (Profile)	Span (m)	Load at Span(Kg)
Thickness : 2 mm	1	1071	Thickness : 1.5 mm	1	1918
Size of the product : 200 x 50 mm (W x H)	1.5	476	Size of the product : 200 x 50 mm (W x H)	1.5	852
	2	268		2	480
	2.4	186		2.4	333

Load Bearing Capacity Comparison between Conventional & Profile Design Allowable Load Graph

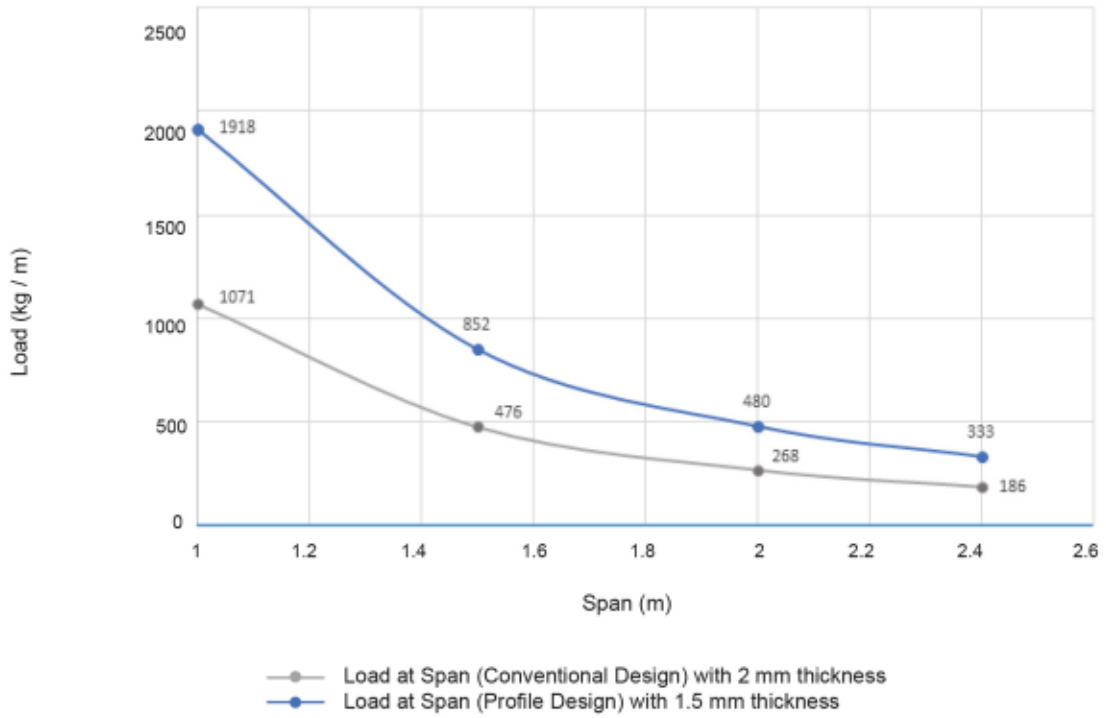

Load Bearing Test Report of Profile Design Cable Tray

Test product	Perforated Cable Tray (Profile Type)
Size of the product	200 x 100 x 2500 mm
MOC	GI
Thickness	1.0 mm
Span	2400 mm
Bearing	75 mm
Reference Standard	NEMA VE 1

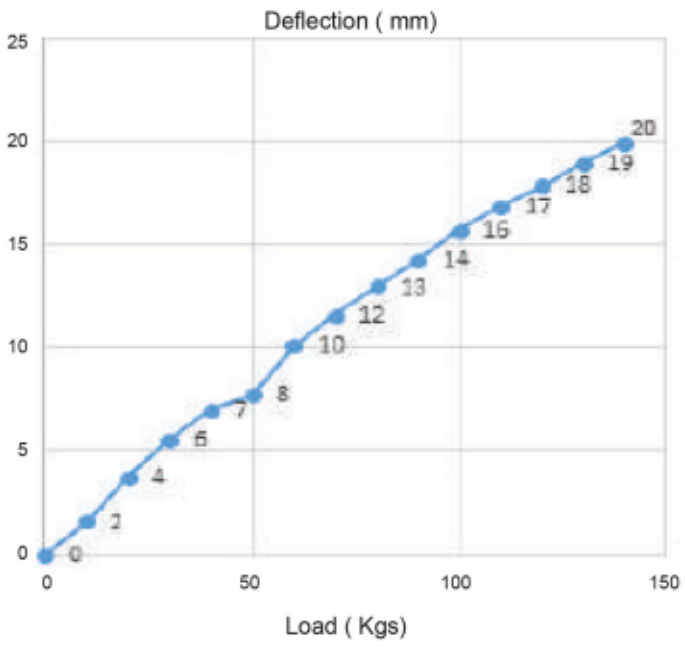

Sl. No.	Applied Load (Kg)	Deflection (mm)	Observation
1	0	0	
2	10	2	
3	20	4	
4	30	6	
5	40	7	
6	50	8	No Permanent Deformation Observed
7	60	10	
8	70	12	
9	80	13	
10	90	14	
11	100	16	
12	110	17	
13	120	18	
14	130	19	
15	140	19	
16	Breaking Load	330 Kgs	Permanent Deformation Observed

GLOBAL PRESENCE

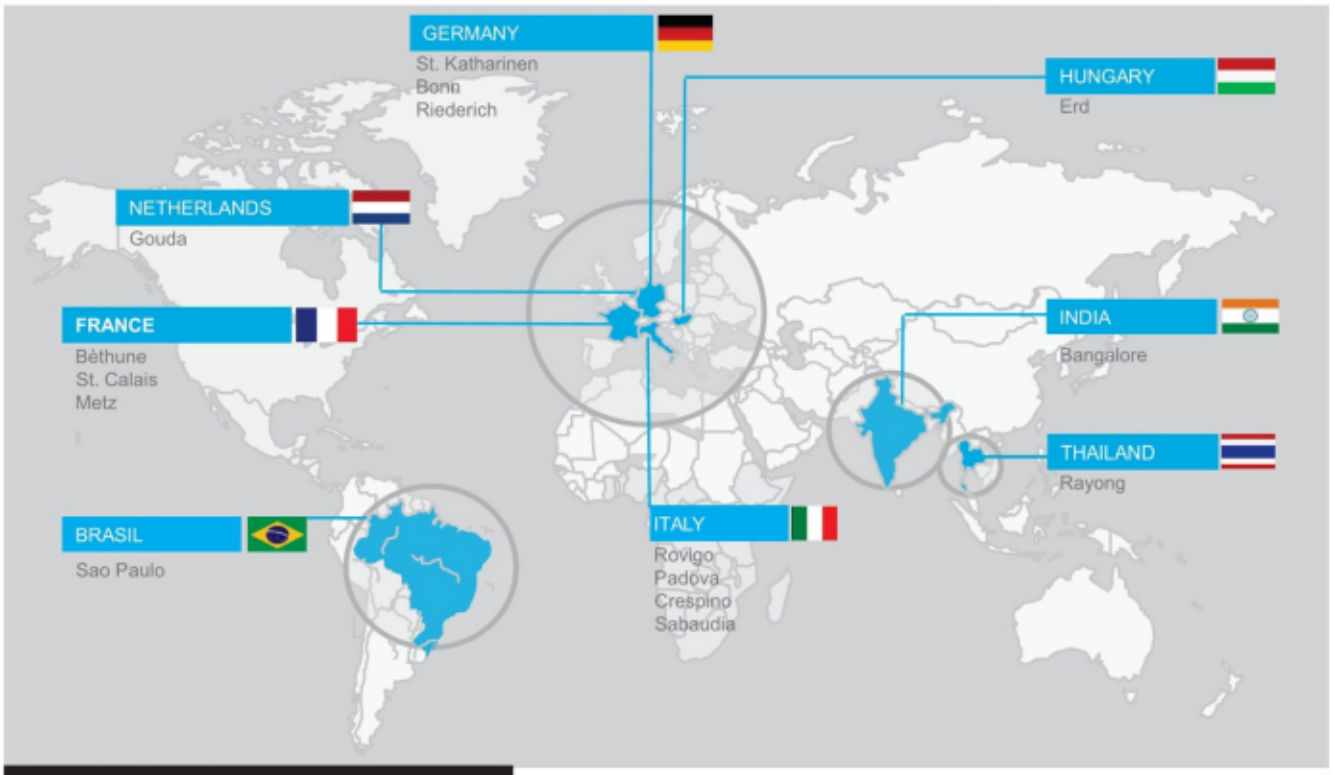

21 PRODUCTION SITES WORLDWIDE

EUROPE

- Niedax Germany, Linz/Rhein
  3 Production plants
  4 Regional warehouses
- Niedax France, Paris
  3 Production plants
- JV Femi-CZ Steel Line CMS
  4 Production plants
- Niedax Netherlands, Nijmegen
  Gouda
  1 Production plant
- Niedax Hungary, Budapest
  1 Production plant
- Niedax Austria, Vienna
- Niedax Switzerland, Visp
  Zürich
- Niedax Belgium, Gent
- Niedax Spain, Madrid
- Niedax Poland, Tarnowkie Góry
- Niedax Czech Republic, Praha
- Niedax Ireland, Tralee
  1 Production plant (Excel Electric, Dublin)
- BVS-Niedax Norway, Oslo
- Niedax Bulgaria, Sofia
- Niedax Romania, Bukarest
- Niedax Slovakia, Bratislava
- Niedax Russia, Moscow

NO. & SO. AMERICA

- Niedax North America, Columbus / Ohio
- Niedax Mexico, Puebla
- Niedax MOPA Brazil, Sao Paulo
  1 Production plant
- Niedax Chile, Santiago
- Niedax Peru, Lima
- Niedax Canada, Québec

ASIA & AUSTRALIA

- Niedax Asia Pacific, Singapore
- Niedax Thailand, Rayong
  1 Production plant
- Niedax India, Bangalore
  1 Production plant
- Vietnam, Ho Chi Minh City
- Niedax Australia, Sydney

UAE

- Niedax Middle East FZE, Dubai

- Niedax South Africa, Johannesburg

80 DISTRIBUTION AGENCIES IN 34 COUNTRIES WORLDWIDE

Niedax India Cable Management Systems Pvt. Ltd.
Corporate Office: Plot No.143/C-4. Bommasandra
Industrial Area, Hosur Road, Anekal Taluk, Bangalore - 560099
Mob: +91-99-8642-8428/ +91-90-0837-4307
Tel: +91-080-4116-1385 | info@niedax.co.in I www.niedax.co.in

ISO 9001 BUREAU VERITAS Certification